Safety Instructions

Machine Title PUMA FINISHING MACHINE

Model N° 990 Serial N° _____

Electric Supply :— 3 Phase 230 Volts. 50 Hz. _____

Single Phase. _____ Volts. _____ Hz. _____

Kw. _____ Amps. _____ R.p.m. _____

Air Supply :— Mains _____ Kg. per. sq.cm. _____ P.S.I. _____

Working _____ Kg. per. sq. cm. _____ P.S.I. _____

Electric Supply

Connect machine to the mains supply indicated above.
Ensure that the earth connection is adequate.
Before leaving the machine unattended turn off the mains switch.

Compressed Air

The mains air pressure supply to the machine and the working pressure must not exceed pressures indicated above.
Before removing any component from the air circuit or removing the filter plug from the air line lubricator, cut off the air supply and exhaust pressure from the circuit.
Before leaving the machine unattended turn off the air supply and exhaust pressure.

Operating

Do not operate the machine if any of the Safety Devices or guards are removed, incorrectly adjusted or altered from their original design.
Do not touch any moving part or tool which is in motion.
Do not touch any heated part.

Servicing

Isolate the machine electrically and/or pneumatically when servicing or adjusting the machine.
Do not leave the machine unattended with guards removed.

BEFORE STARTING MACHINE :-

SCOURING SPEED SWITCH (PAGE 1) MUST BE SET TO ZERO.
EXTRACTOR AND CUTTERS SWITCH (PAGE 1) MUST BE SET TO OFF.
EMERGENCY SWITCH (PAGE 1) MUST BE IN THE OUT POSITION.
MAIN POWER SWITCH (PAGE 1) MUST BE SET TO ZERO.

STARTING MACHINE :-

SWITCH MAIN POWER SWITCH TO POSITION 1.
SWITCH EXTRACTOR AND CUTTERS SWITCH TO POSITION 1.

MACHINE SHOULD NOW BE READY WITH JUST THE EXTRACTOR RUNNING.

IF THE CUTTERS ARE REQUIRED THEN SWITCH EXTRACTOR AND CUTTERS SWITCH TO POSITION 2.
IF SCOURING OR BRUSHING IS REQUIRED THEN SWITCH SCOURING AND BRUSHING SWITCH TO :-
POSITION 1 - QUARTER SPEED
POSITION 2 - HALF SPEED
POSITION 3 - THREE QUARTER SPEED
POSITION 4 - FULL SPEED

TO EMPTY DRAWER :-

REMOVE FRONT DOOR BY LIFTING AND TURNING THE LATCH IN THE DOOR , THEN LIFTING THE DOOR OFF.
SHAKE DOWN THE DUST BAG BY HAND.
RELEASE THE DRAWER SEAL BY TURNING THE DRAWER SEAL CAM - PAGE 8 No2 - ANTI-CLOCKWISE.
PULL OUT DRAWER AND EMPTY.

TO CHANGE SCOURING BANDS :-

SWITCH OFF MACHINE.
LIFT SCOURING BAND GUARD BY RELEASING CATCH ZA 145 SHOWN ON MAIN PHOTO.
PULL HANDLE - PAGE 3 No 36 - FORWARD UNTIL IT LOCKS.
THIS ACTION RELEASES THE TENSION ON THE BANDS , ENABLING YOU TO REMOVE THE OLD ONE AND REPLACE IT WITH A NEW ONE.
ZA 143 40mm X 1500mm X 24 GRIT - ROUGH
ZA 144 40mm X 1500mm X 80 GRIT SMOOTH

AFTER CHANGING THE BANDS , RELEASE THE TENSION LEVER BACKWARDS, CLOSE THE SCOURING BAND GUARD AND CLOSE THE CATCH.

SWITCH THE SCOURING BANDS ON AGAIN AND CHECK THE TRACKING.
IF THE TRACKING REQUIRES SETTING THIS IS DONE BY MEANS OF THE TWO HEXAGON BOLTS - PAGE 3 No 16 AND No 31.

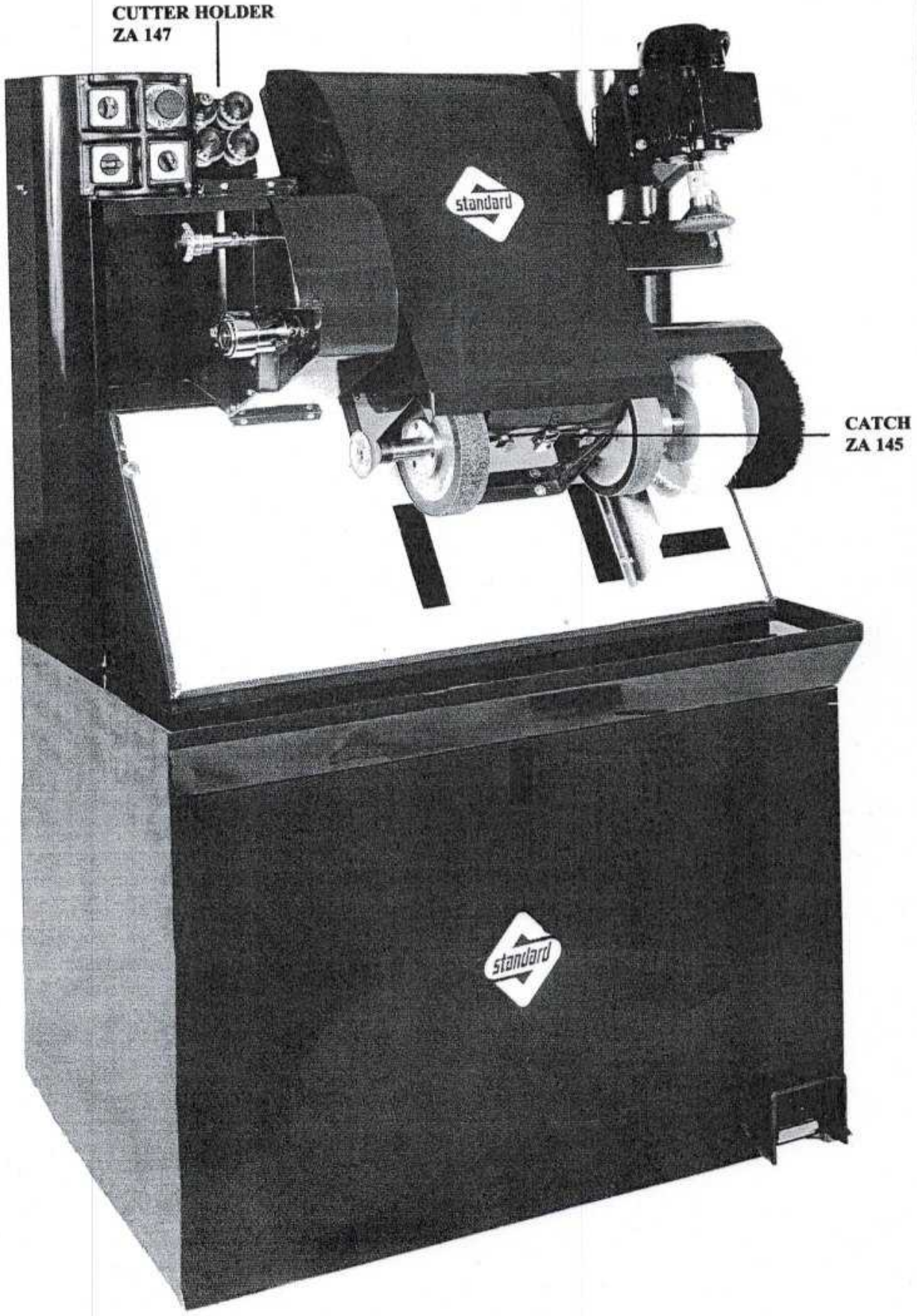
CUTTER HOLDER
ZA 147
CATCH
ZA 145
standard
standard

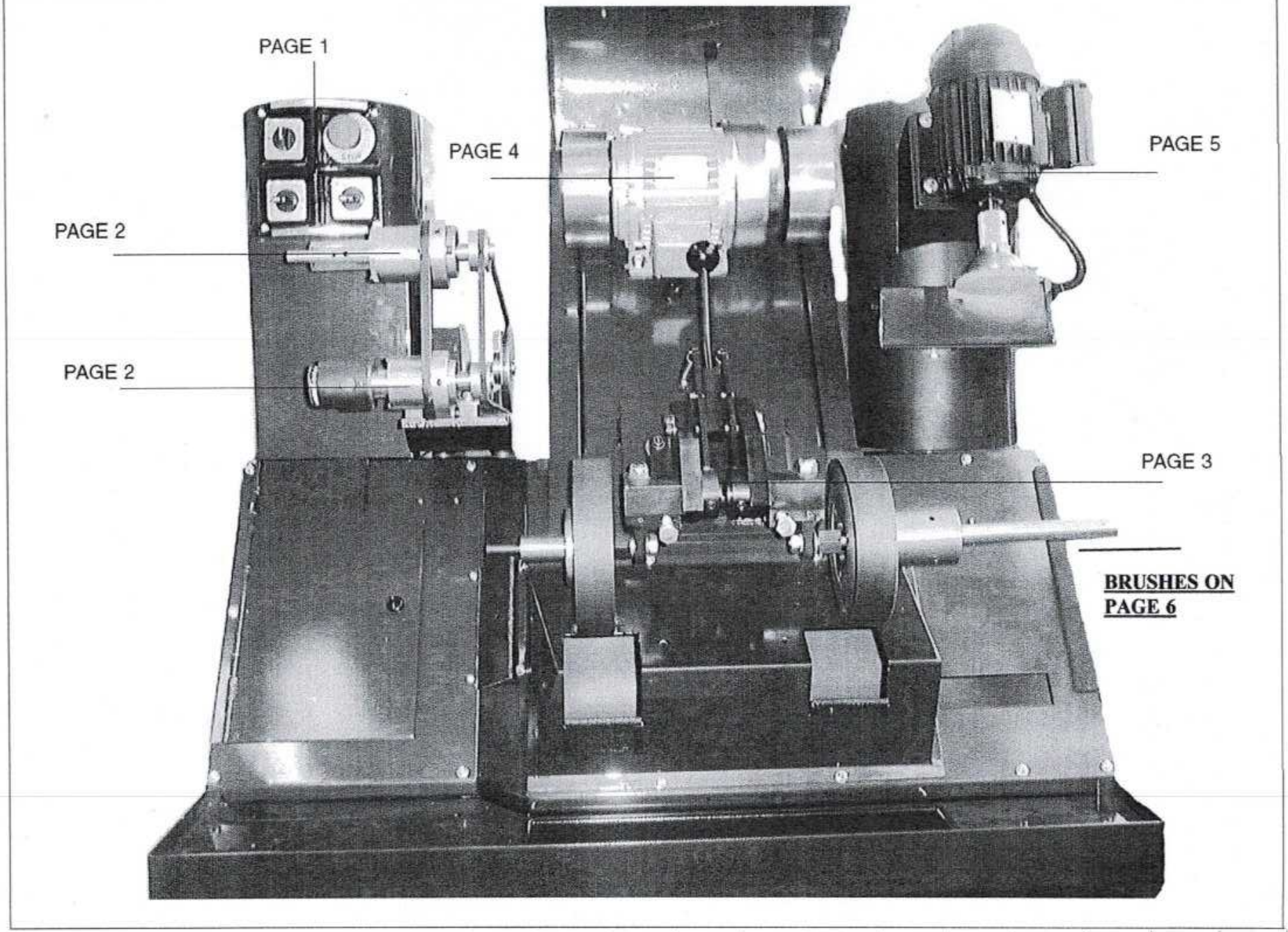
PAGE 1
PAGE 4
PAGE 5
PAGE 2
PAGE 2
PAGE 3
BRUSHES ON
PAGE 6

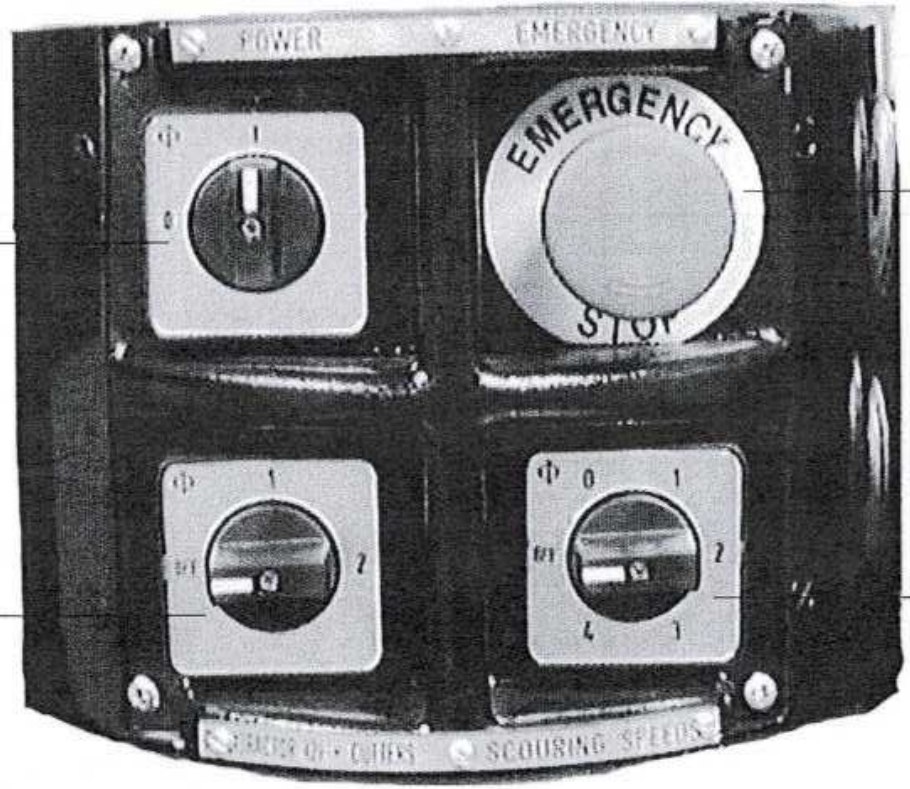

MAIN POWER SWITCH

EMERGENCY STOP

POSITION ONE =
EXTRACTOR
POSITION TWO =
EXTRACTOR + CUTTERS

SCOURING AND BRUSH SPEEDS - MUST BE SET TO ZERO BEFORE SWITCHING ON MACHINE

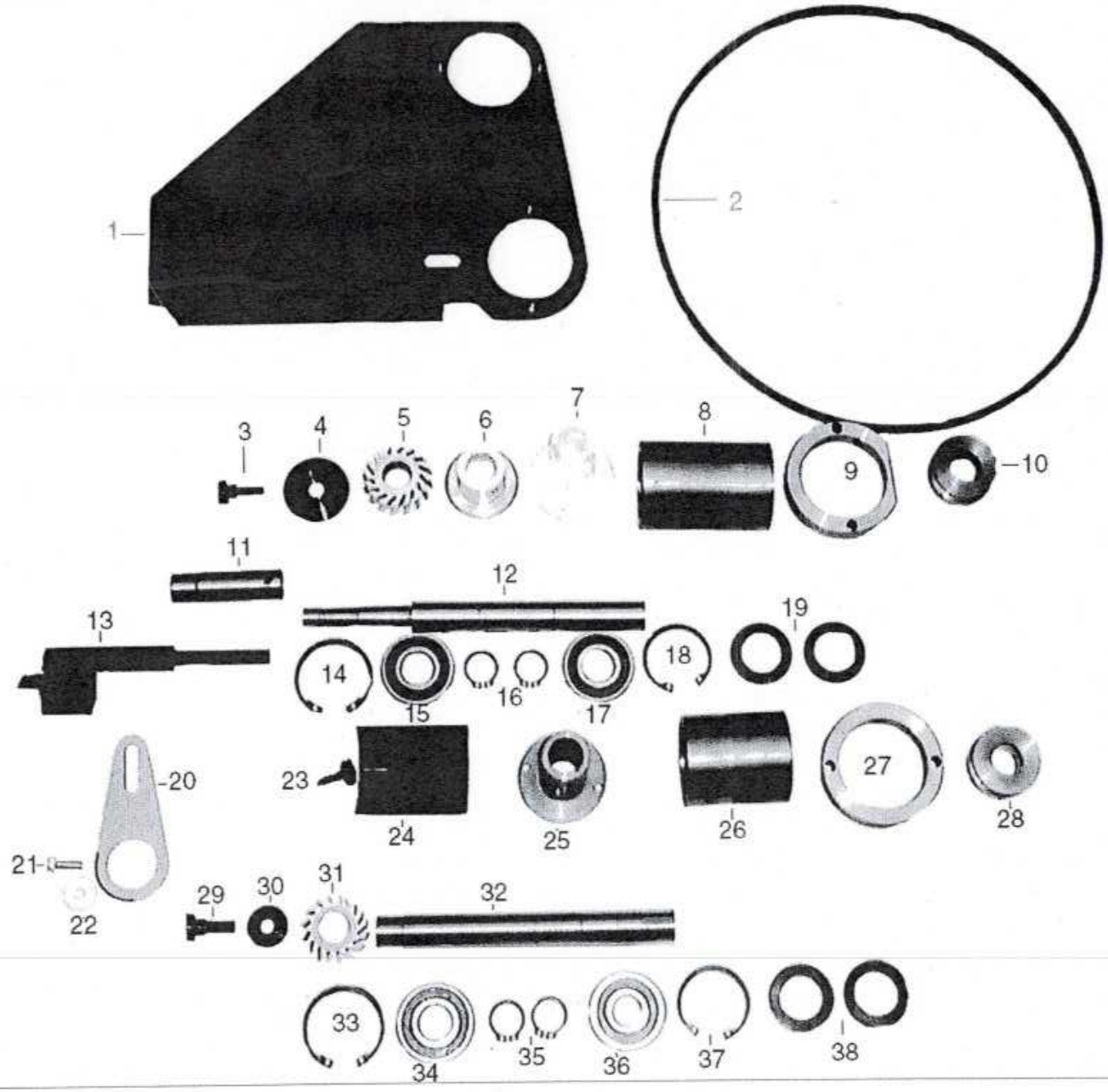
1
2
3
4
5
6
7
8
9
10
11
12
13
14
15
16
17
18
19
20
21
22
23
24
25
26
27
28
29
30
31
32
33
34
35
36
37
38

1	ZA 10B, 109 &110	TRIMMER SHAFTS MOUNTING BRACKET
2	ZA 161	DRIVE BELT
3	YL 110	CUTTER FIXING SCREW
4	POW 201604400	CUTTER SHIELD
5	POW 202000206	2MM CUTTER
	POW 202000303	3MM CUTTER
	POW 202000508	5MM CUTTER
	POW 202000702	7MM CUTTER
	POW 202001806	9MM CUTTER
6	POW 144703106/YL 127	ALUMINIUM COLLAR
7	ZA 117	GUARD
8	ZA 102	BEARING SLEEVE
9	ZA 103	BEARING SLEEVE FIXING COLLAR
10	ZA 115	DRIVE PULLEY
11	ZA 106	BAYONETTE FOR CUTTERS
12	ZA 104	CUTTER SHAFT
13	ZA 112	TRIMMER GUARD
14	CC 177	CIRCLIP
15	CC 252	BEARING
16	CC 115	CIRCLIP (2)
17	CC 252	BEARING
18	CC 177	CIRCLIP
19	POW 145026469	SPRING WASHER (2)
20	ZA 113	EDGE GUIDE
21	M6 X 16 HEXAGON BOLT	
22	M6 WASHER	
23	YL 109	GUIDE LOCKING SCREW
24	ZA 122	GUIDE
25	ZA 114	GUIDE MOUNTING SLEEVE
26	ZA 101	BEARING SLEEVE
27	ZA 107	BEARING SLEEVE FIXING COLLAR
28	ZA 115	DRIVE PULLEY
29	YL 110	CUTTER FIXING SCREW
30	YL 220	TRIMMER SHIELD
31	POW 202001806	HIGH SPEED STEEL CUTTER
	POW 202090183	TUNGSTEN TIPPED CUTTER
32	ZA 105	CUTTER SHAFT
33	CC 177	CIRCLIP
34	CC 252	BEARING
35	CC 115	CIRCLIP (2)
36	CC 252	BEARING
37	CC 177	CIRCLIP
38	POW 145026469	SPRING WASHER (2)
39	ELE 826	TRIMMER MOTOR
40	ZA 116	MOTOR PULLEY
41	ZA 111	MOTOR MOUNTING PLATE
42	ZA 159	MOTOR PLATE MOUNTING RUBBERS

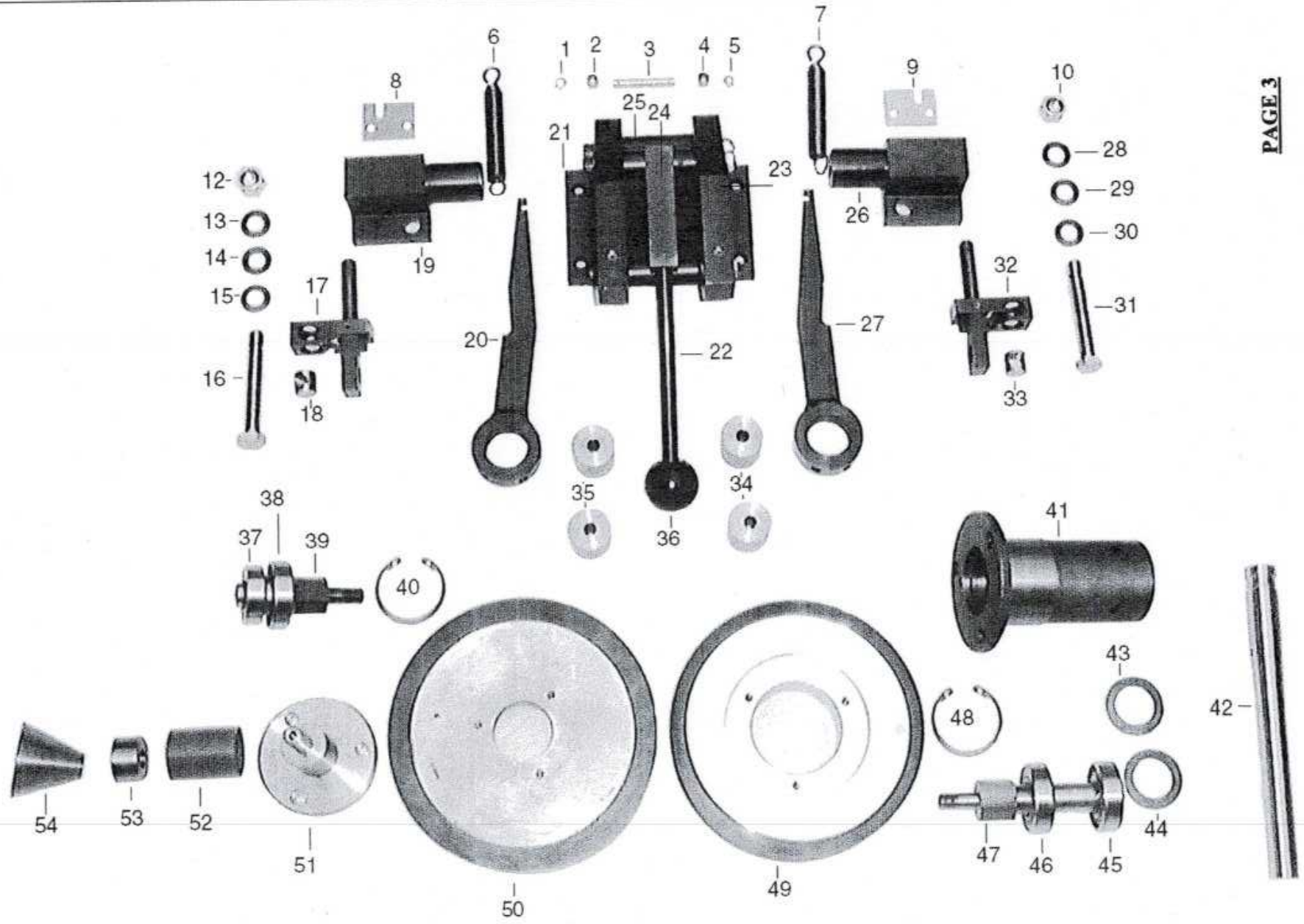
1
2
3
4
5
6
7
8
9
10
12
13
14
15
16
17
18
19
20
21
22
23
24
25
26
27
28
29
30
31
32
33
34
35
36
37
38
39
40
41
42
43
44
45
46
47
48
49
50
51
52
53
54

1	CC 102	CIRCLIP
2	YL 62	ROLLER
3	YL 76	ROLLER SHAFT
4	YL 62	ROLLER
5	CC 102	CIRCLIP
6	YL 1019	BAND TENSION SPRING
7	YL 1019	BAND TENSION SPRING
8	ZA 124	TRACKING BOLT KEEPER PLATE
9	ZA 124	TRACKING BOLT KEEPER PLATE
10	YL 273	12MM NYLOCK NUT
11		
12	YL 273	12MM NYLOCK NUT
13,14 &15	YL 272	SPRING WASHER
16	ZA 123	TRACKING BOLT
17	ZA SA 126	SCOURING BAND TRACKING BRACKET
18	ZA 129	PIVOT NUT
19	ZA 127	SCOURING BAND MOUNTING BRACKET
20	YL SA 92	SCOURING BAND RELEASE LEVER
21	YL 77	SCOURING BAND ASSEMBLY BASE
22	ZA 138	SCOURING BAND RELEASE - HAND LEVER
23	YL 705	SCOURING BAND ASSEMBLY SIDE PLATES (2)
24	YM 46	HAND LEVER MOUNTING BLOCK
25	YL 328	SIDE PLATES SPACING COLLARS
26	ZA 128	SCOURING BAND MOUNTING BRACKET
27	YL SA 92	SCOURING BAND RELEASE LEVER
28,29 &30	YL 272	SPRING WASHER
31	ZA 123	TRACKING BOLT
32	ZA SA 126	SCOURING BAND TRACKING BRACKET
33	ZA 129	PIVOT NUT
34&35	ZA 125	MOUNTING BLOCKS FOR SCOURING BAND ASSEMBLY BASE
36	YL 323	BLACK PLASTIC KNOB
37	CC 242	BEARING
38	CC 253	BEARING
39	YL 84	BEARING SHAFT
40	CC131	CIRCLIP
41	ZA 120	BEARING SLEEVE
42	ZA 118	TAPER SHAFT FOR BRUSH AND MOP SHAFT
43	POW 144702967	SPRING WASHER
44	POW 144702967	SPRING WASHER
45	CC 253	BEARING
46	CC253	BEARING
47	ZA 119	BEARING SHAFT
48	CC 131	CIRCLIP
49	POW 14037504A	SCOURING WHEEL
	ZA 158	AFTER M/C Nos SB2519/1 TO 5 inc AND SB2358/1 TO 5 inc.
50	YL 297	SCOURING WHEEL
51	YL 295	BREASTER MOUNTING SPINDLE
52	YL 331	COLLAR
53	YL 152	TAPER LOCKING COLLAR
54	POW 144704587	BREASTER CONE
55	POW 185102042	BREASTER CONE 50mm 24 GRIT CONE

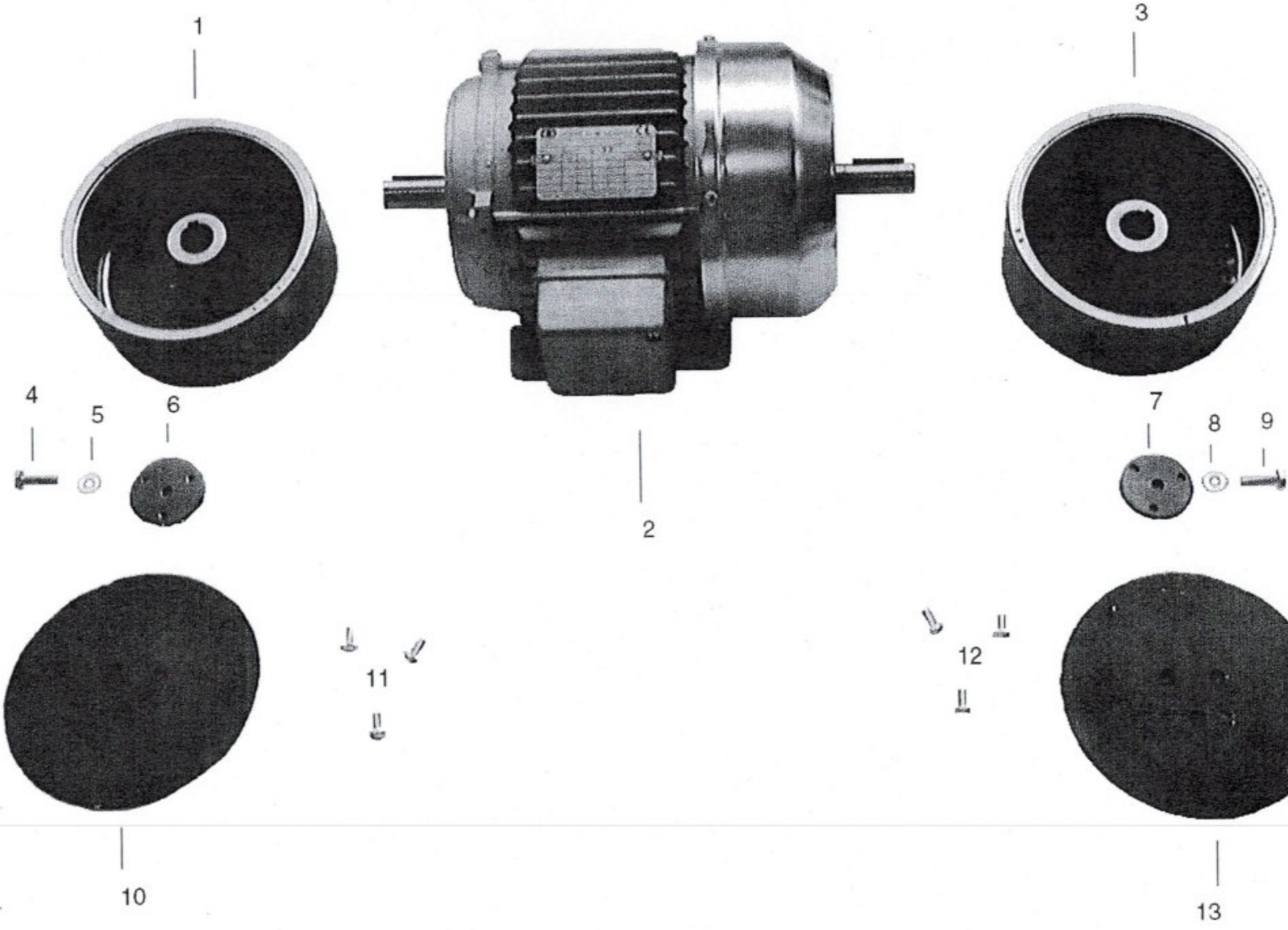
1
2
3
4
5
6
7
8
9
10
11
12
13

1	POW 144700409	BACK PULLEY
2	ELE 548	SCOURING MOTOR
3	POW 144700409	BACK PULLEY
4	M6 X 16 HEXAGON BOLT	
5	M6 SPRING WASHER	
6	POW 144700417	PULLEY FIXING WASHER
7	POW 144700417	PULLEY FIXING WASHER
8	M6 SPRING WASHER	
9	M6 X 16 HEXAGON BOLT	
10	POW 144700433	DUST SHIELD
11	M5 X 12 PAN HEAD SCREWS (3)	
12	M5 X 12 PAN HEAD SCREWS (3)	
13	POW 144700433	DUST SHIELD
14		

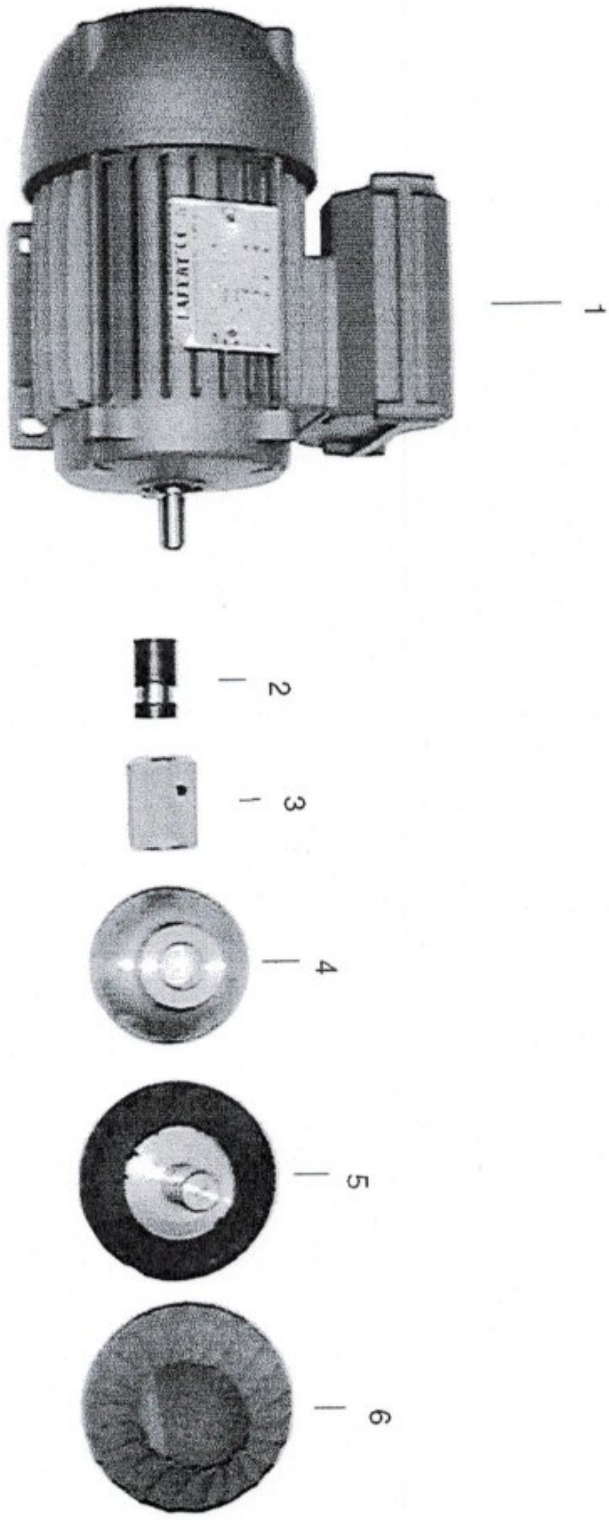
1
2
3
4
5
6

1	ELE 114	NAUMKEAG MOTOR
2	ZA 137	MOTOR ADAPTOR FOR NAUMKEAG
3	YL 365	LOCKING COLLAR
4	YL 169	CLAMP PLATE FOR NAUMKEAG
5	YL 168	RUBBER HOLDER + RUBBER CUP (POW 144705338)
6	POW 183341325	90MM 80 GRIT COVER
7		

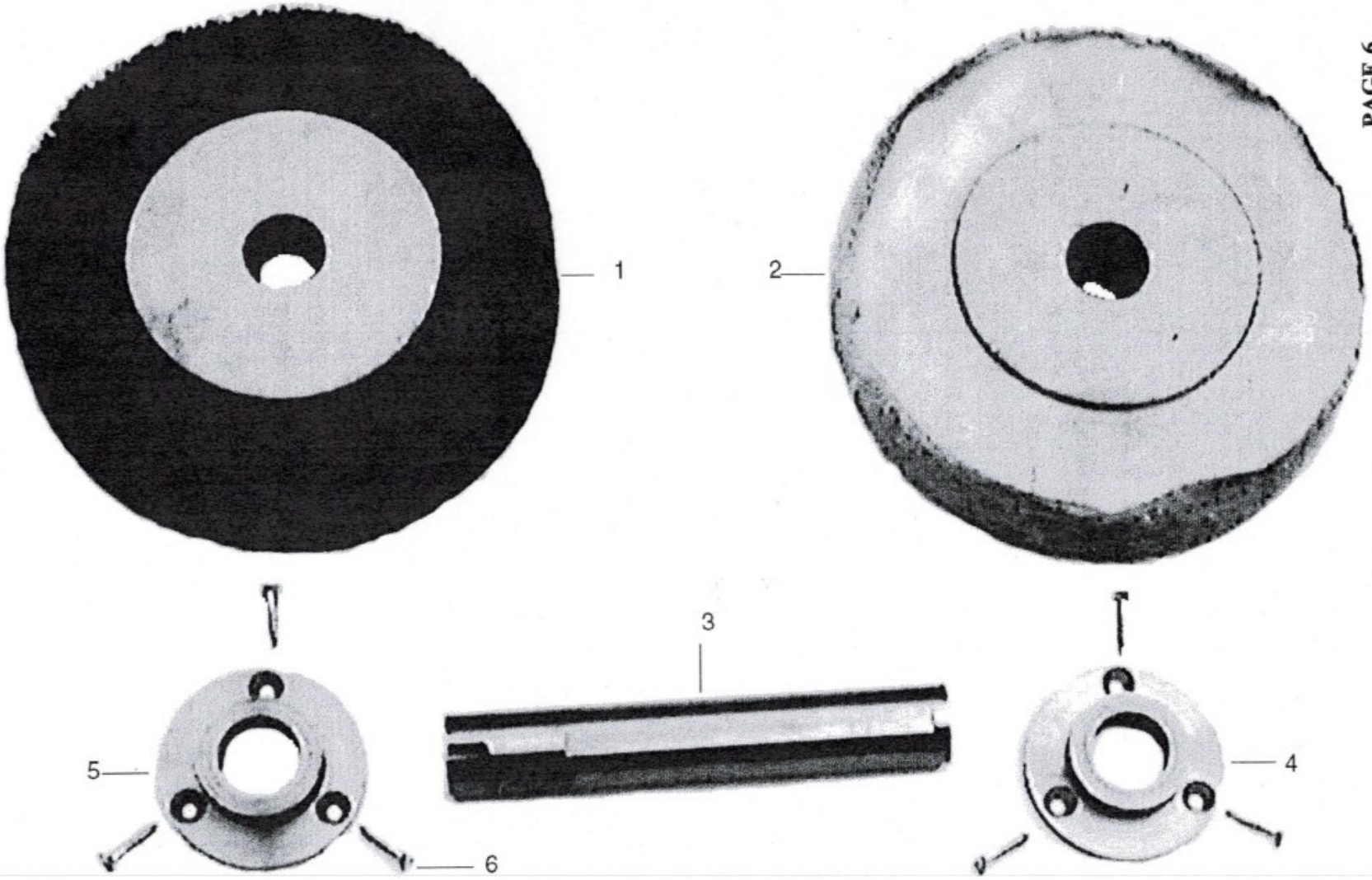
1
2
3
4
5
6

1	BAC 100B	BROWN BRUSH
	BAC 100	BLACK BRUSH
	BAC 100A	NEUTRAL BRUSH
2	LH 108	LINEN MOP
3	ZA 121	BRUSH & MOP SHAFT
4	POW 141134100	MOUNTING BOSS
5	POW 141134100	MOUNTING BOSS
6	10 X 1 A2 POZI CSK WOODSCREW	
7		

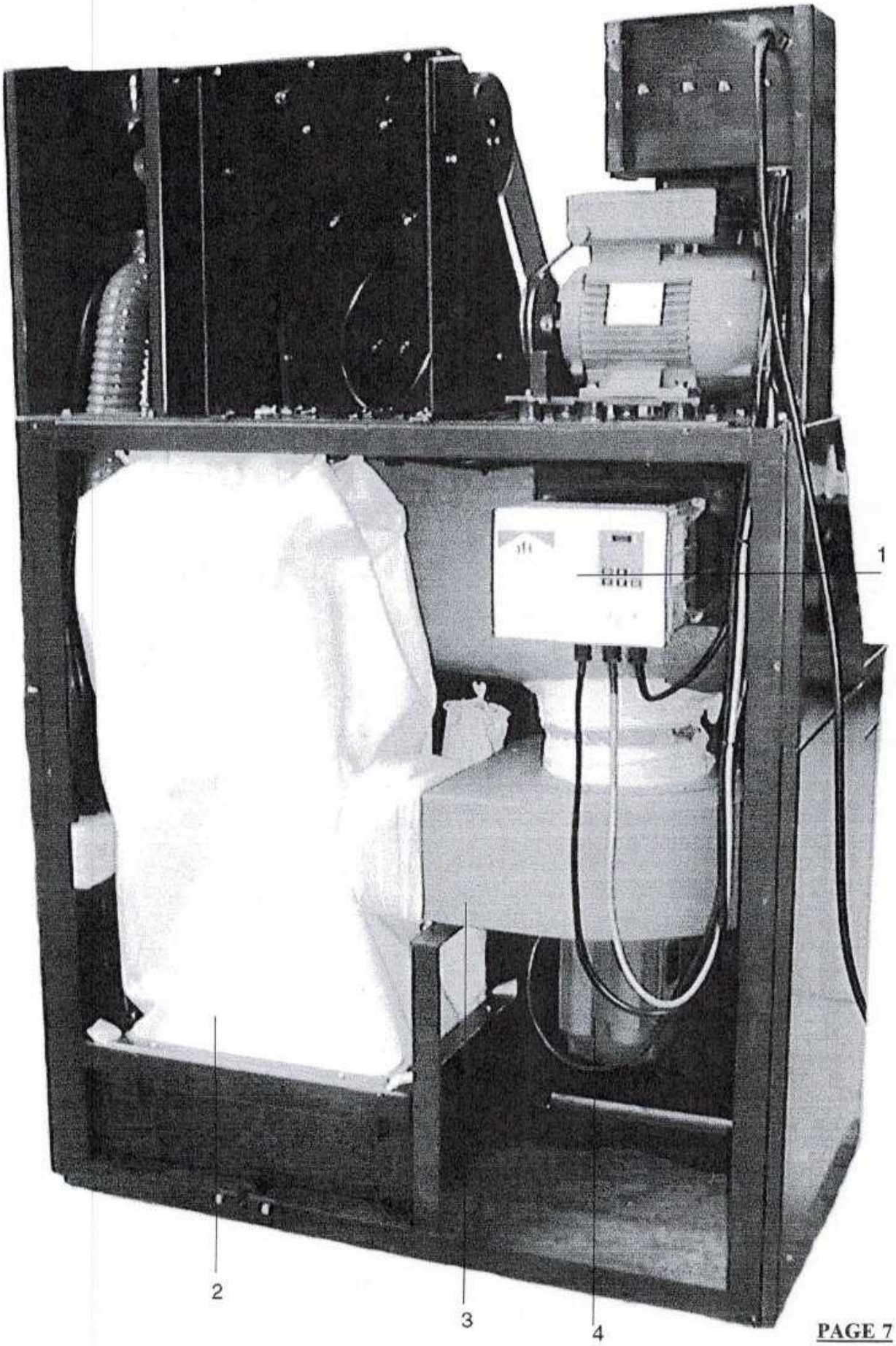
1
2
3
4

1	ELE 1155	INVERTER
2	ZA 136	DUST BAG
3	ZA SA 320	EXTRACTOR ASSEMBLY
4	ELE 584	EXTRACTOR MOTOR
5		
6		
7		

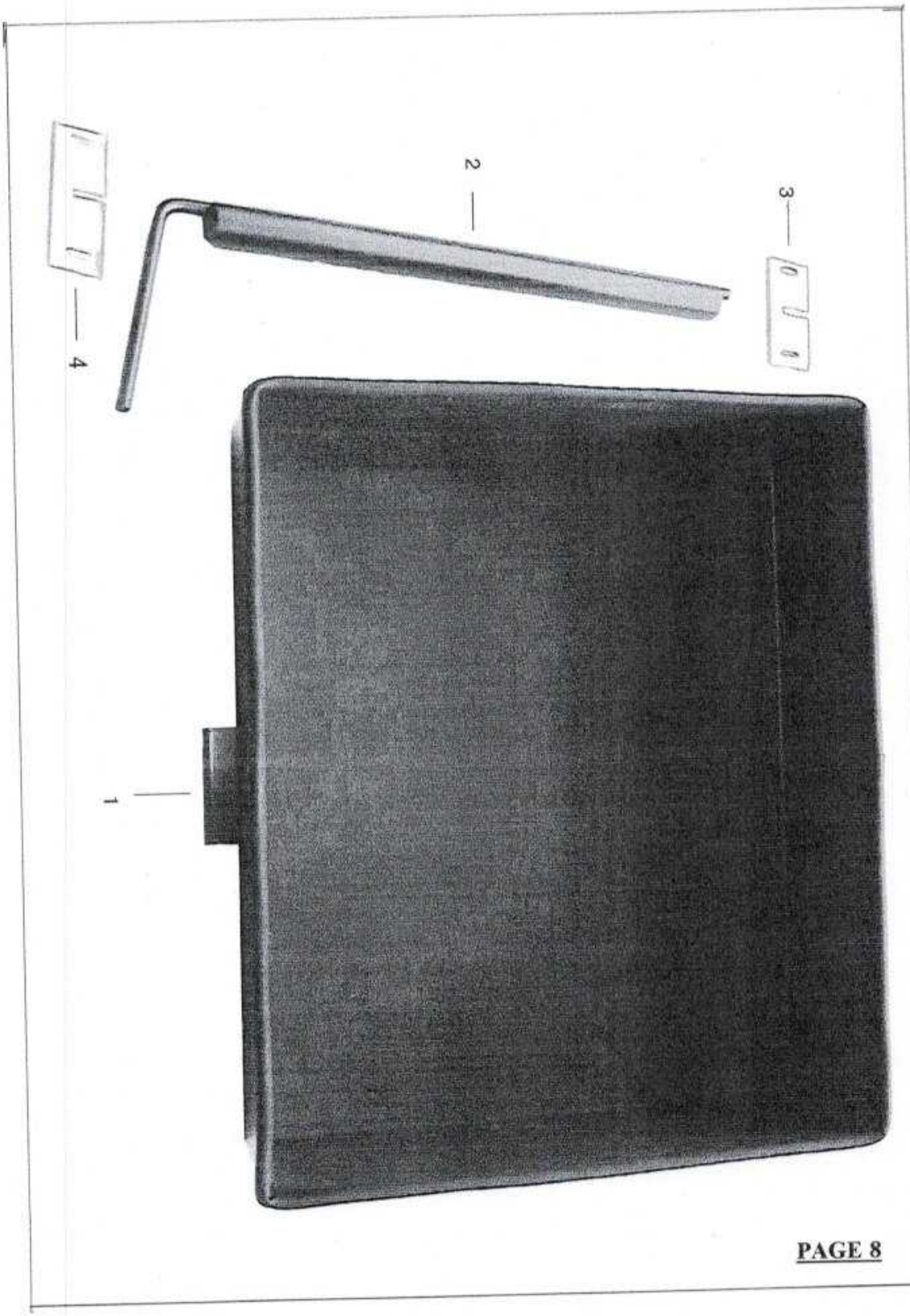
4
2
3
1

1	ZA 315	DUST DRAW
2	ZA 135	DUST DRAW CAM
3	ZA 134	DUST DRAW CAM PLATE
4	ZA 134	DUST DRAW CAM PLATE
5		DUST DRAW RUBBER SEAL
6		
7		

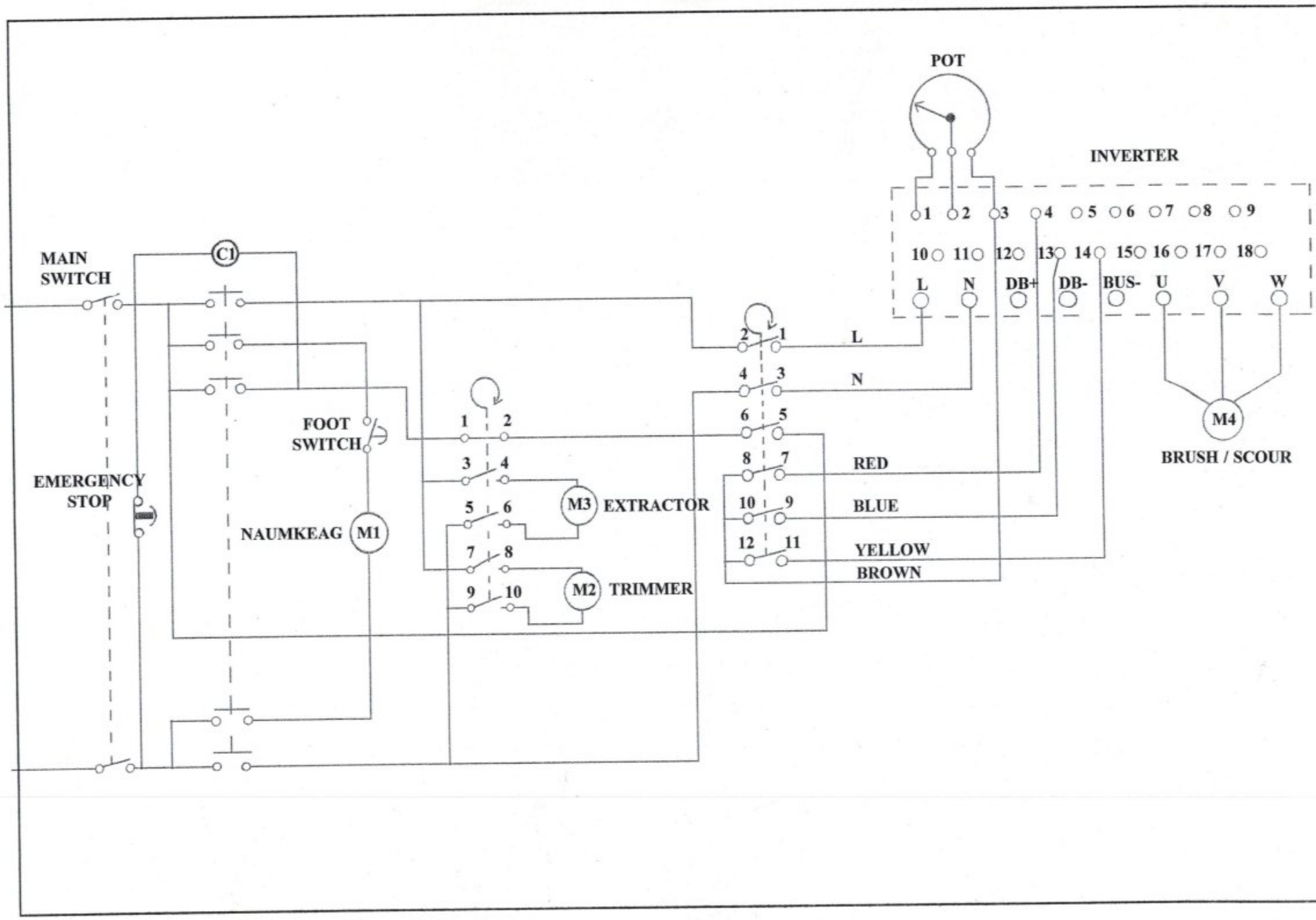
POT
INVERTER
1 2 3 4 5 6 7 8 9
10 11 12 13 14 15 16 17 18
L N DB+ DB- BUS- U V W
MAIN SWITCH
C1
FOOT SWITCH
EMERGENCY STOP
NAUMKEAG M1
M3 EXTRACTOR
M2 TRIMMER
L
N
RED
BLUE
YELLOW
BROWN
M4
BRUSH / SCOUR

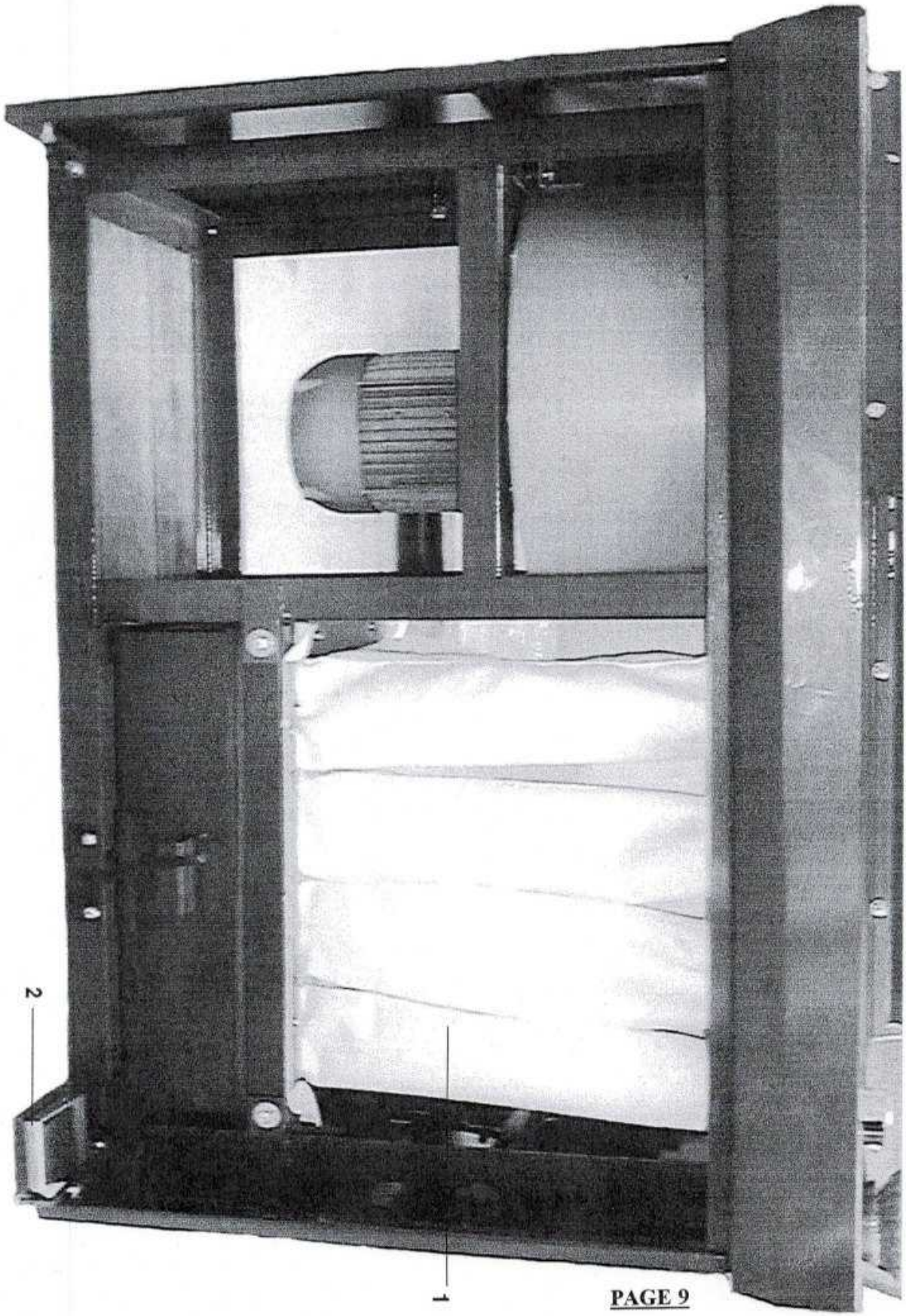
2
1

1	ZA 136	DUST BAG
2	ELE 1154	NAUMKEAG FOOT PEDAL
3		
4		
5		
6		
7		